DP-D1

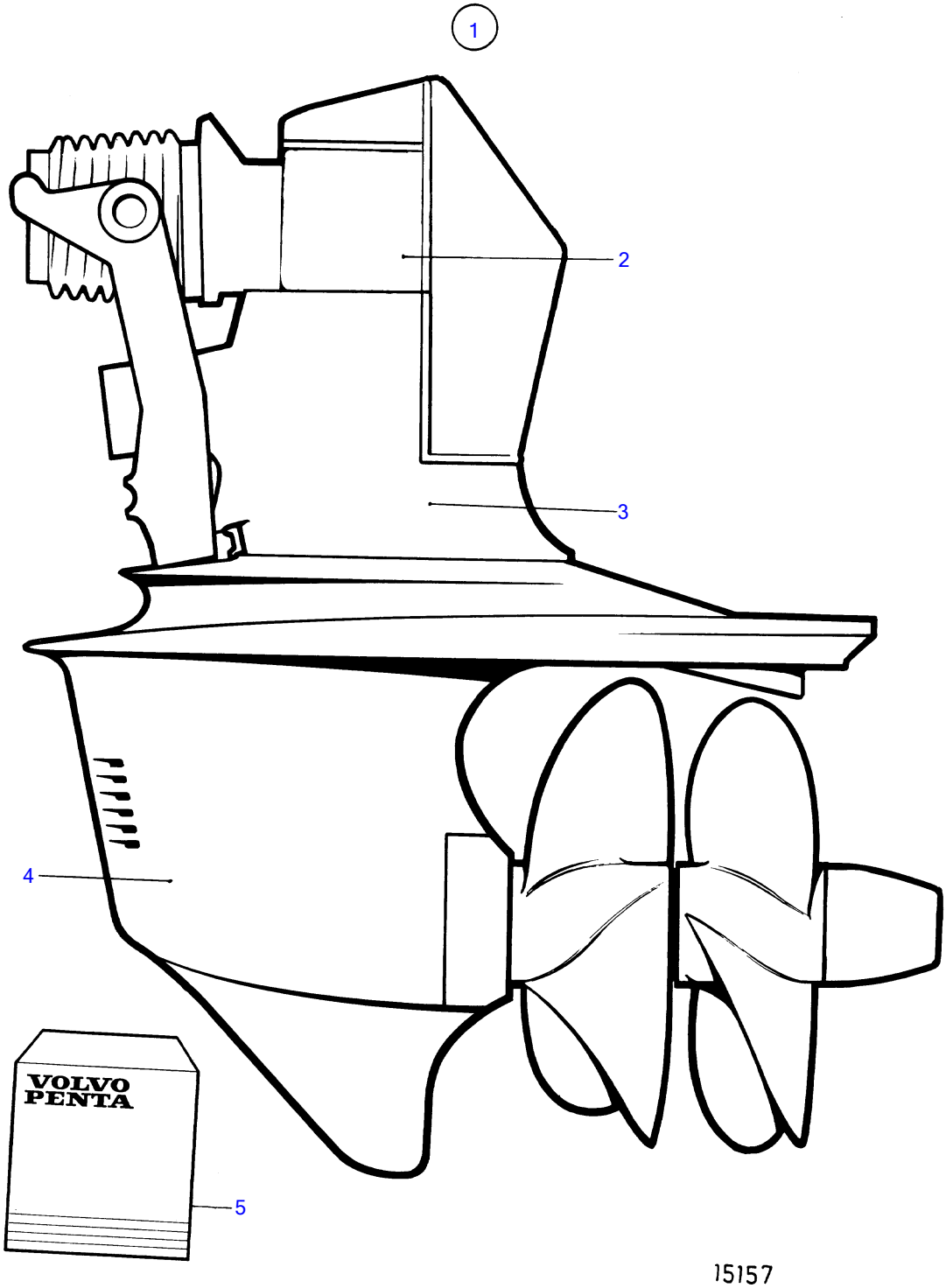

DP-D1

REF	PART NO.	QTY	DESCRIPTION	SEE SEC.	NOTES
1	872862	1	Aquamatic drive		Ratio 1.95:1
2	3858785	1	▪ Upper gear	612	(873002)
	3803483	1	▪ Upper gear, exch, exch	612	(873002)
3		1	▪ Intermediate housing	614	
4	872768	1	▪ Lower gear	1764	Ratio 1.95:1
	3803187	1	▪ Lower gear, exch, exch	1764	Ratio 1.95:1
5	876266	1	Gasket kit, upper gear		See group 99
	876267	1	Gasket kit, lower gear		See group 99